Technical Features

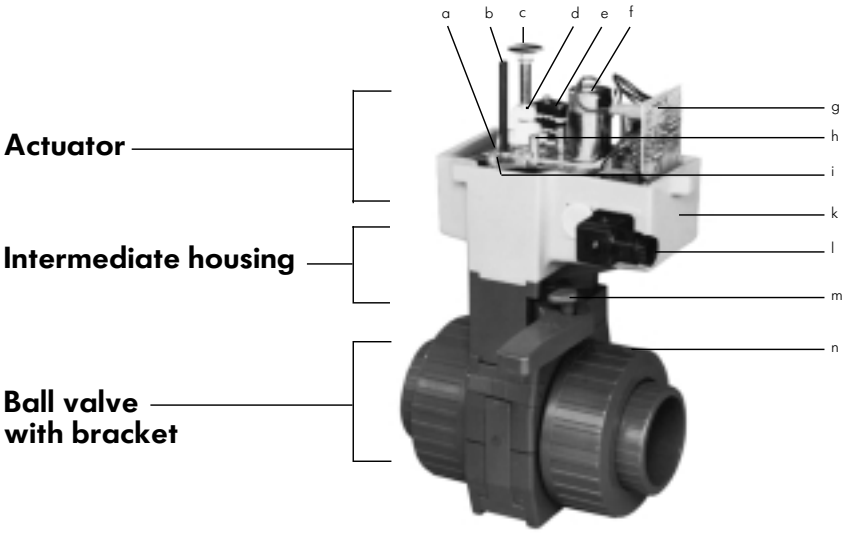

a) Gear box
b) Spindle for additional switching cams
c) Position indicator
d) Control cams for limit switch
e) Standard limit switch for end positions
f) Reversible DC motor
g) Power supply board
h) Mounting point for potentiometer or operating time adjuster
i) Mounting point for additional limit switches (maximum of 4)
k) Actuator housing of PP-GF orange
l) Cable plug (DIN 43650)
m) Catch
n) Manual override lever

Assembly of Valve

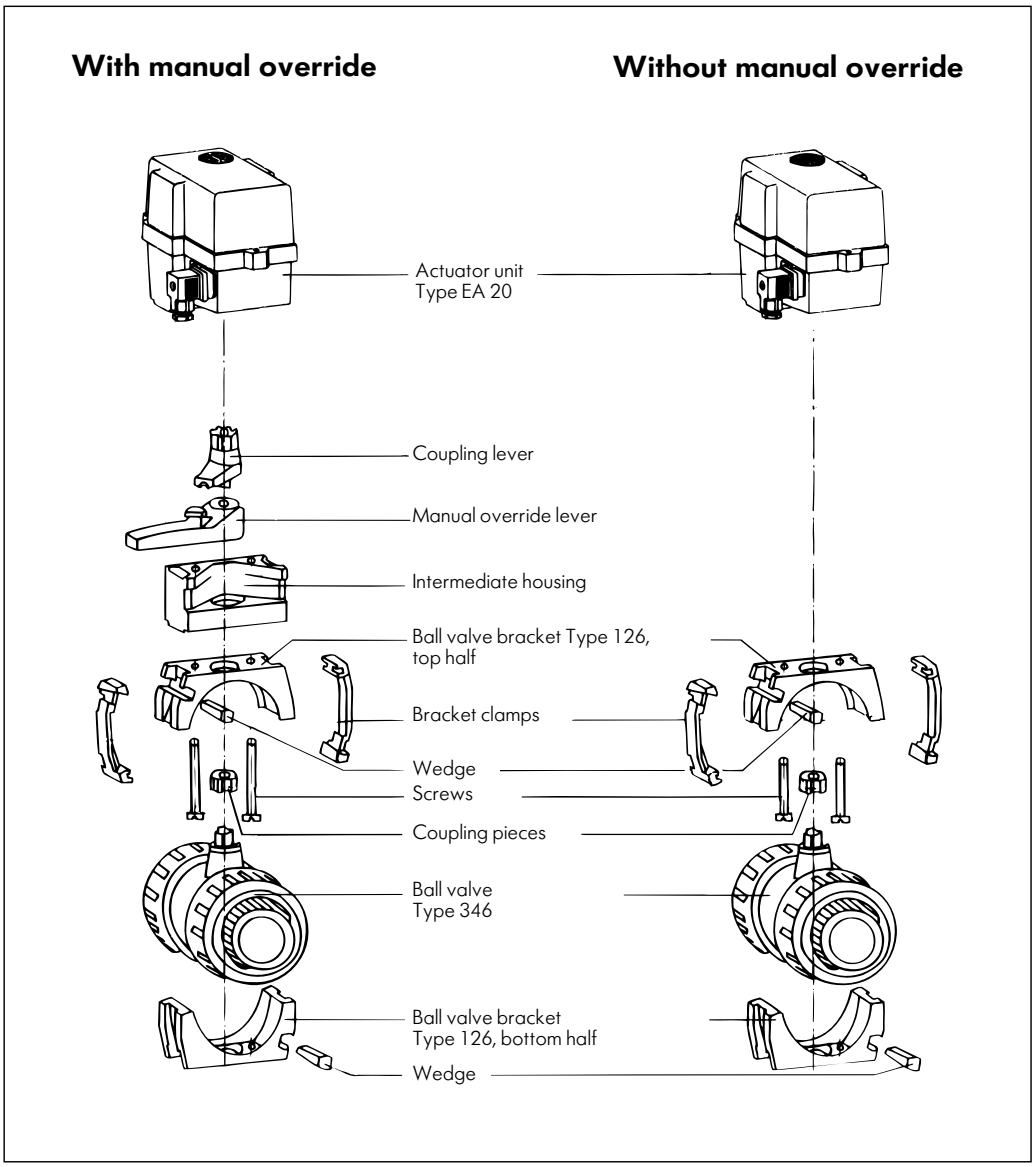

Dimensions

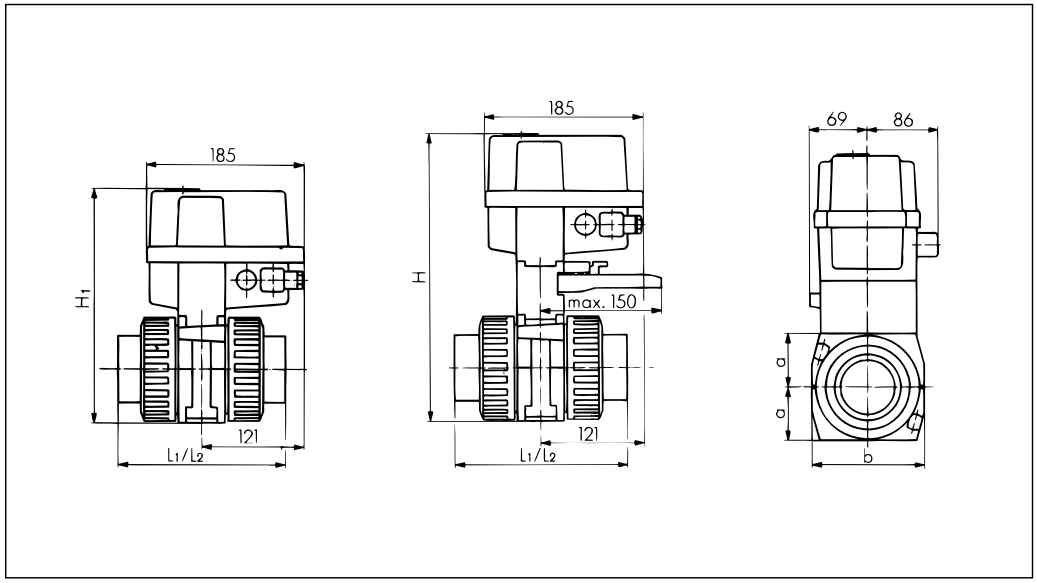

DN	a	b	H	H_1	L_1*	L_2*	Weight with manual override	without manual override
mm	mm	mm	mm	mm	mm	mm	kg	kg
10	24	118	258	196	99	114	3.0	2.6
15	24	118	258	196	102	124	3.0	2.6
20	29	118	268	206	120	144	3.1	2.7
25	34	118	278	216	131	154	3.3	2.9
32	43	118	296	234	150	174	3.5	3.1
40	50	118	310	248	163	194	3.9	3.5
50	61	130	332	270	197	224	4.7	4.3

* L_1 solvent cement socket/threaded socket * L_2 solvent cement spigot

Version with Fixed Flanges

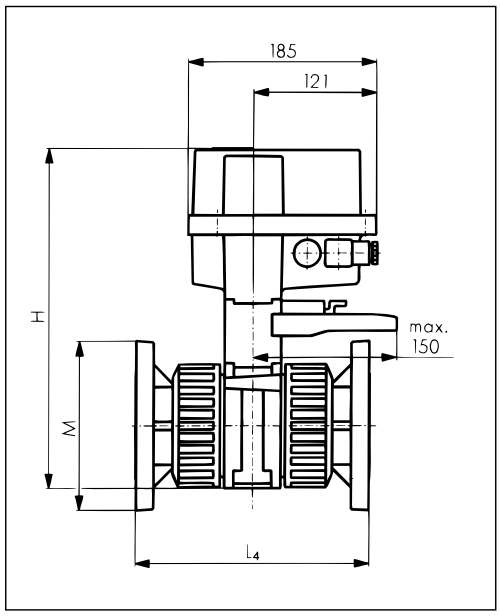

DN	H	L_4	M	Weight with manual override
mm	mm	mm	mm	kg
10	258	120	90	3.1
15	258	130	95	3.2
20	268	150	105	3.3
25	278	160	115	3.6
32	296	180	140	4.0
40	310	200	150	4.4
50	332	230	165	5.4

Wiring Diagram

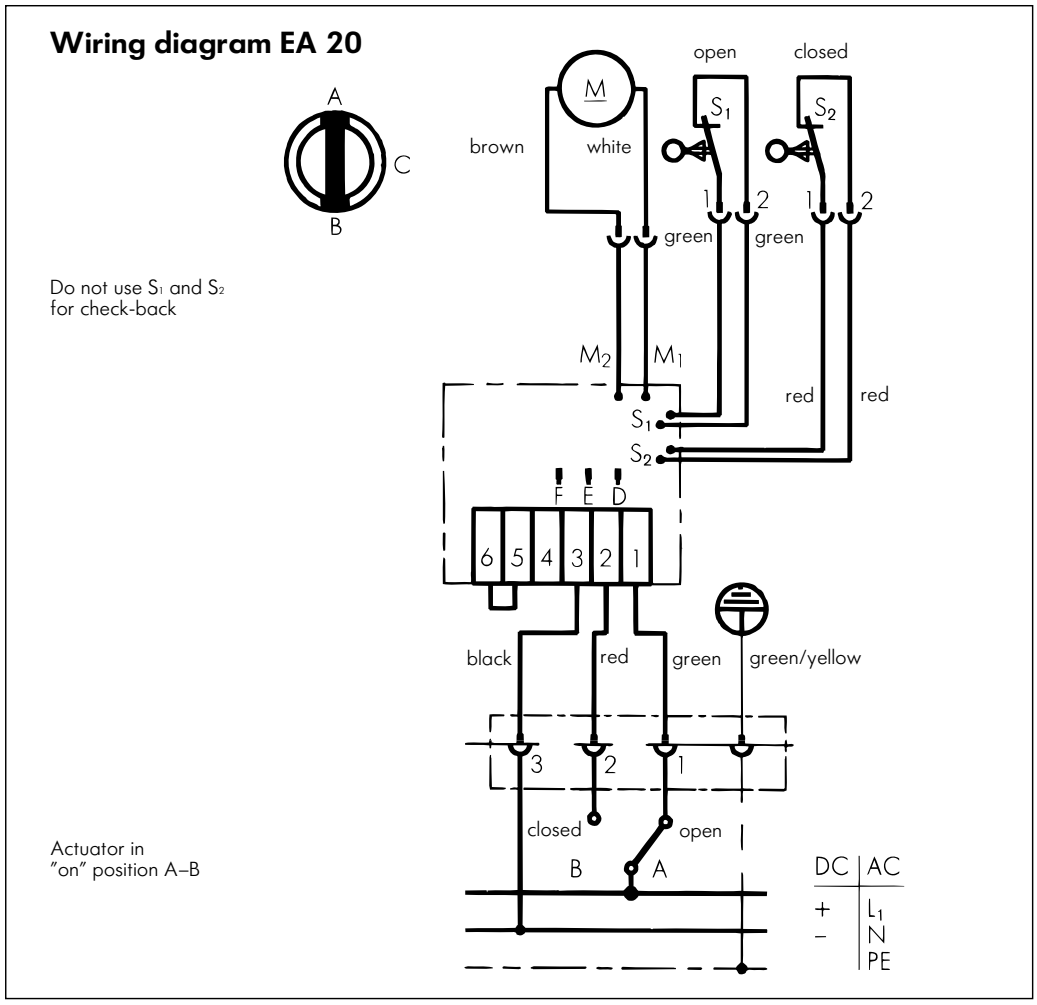

Supplementary Components/Accessories EA 20

Description	Technical data	Code
Set of 2 additional auxiliary switches	250V AC, 10A	199 190 138
Set of 4 additional auxiliary switches	250V AC, 10A	199 190 139
Set of 2 additional auxiliary switches for intermediate position	250V AC, 10A	199 190 141
Set of 2 additional auxiliary switches, inductive, with LED NPN	9.6–55V DC 0.2A	199 190 146
Set of 2 additional auxiliary switches, inductive, with LED PNP	9.6–55V DC 0.2A	199 190 147
Set of 2 additional auxiliary switches, inductive Namur	5–24 V DC 10 mA	199 190 148
Set of 2 additional auxiliary switches with gold contacts	4–30V DC 1–100 mA	199 190 149
Potentiometer	1 kΩ	199 190 140
Control time adjustment module	10–80 s	199 190 144
Heating element	115–230V, 50–60 Hz	199 190 142
Heating element	24V ~ / =	199 190 143
FR 10 Fail Safe Return unit	230V 115V	199 190 366 199 190 365

Technical Data Actuator Unit EA 20

Nominal voltage	115/230 V±10 %, 50–60 Hz (switchable) 24V DC/24V AC, 50–60 Hz
Power consumption	12V A AC, 7W DC
Insulation	IP 65 in accordance with DIN 40050
Duty cycle	100% at 25°C / 70% at 50°C, 20 min
Overload protection	Dependent on current (automatic reset)
Electric connection	Cable plug 3 P + E in accordance with DIN 43650 additional cable connections PG 11
Control time	6 s/90°∠
Angle of operation	max. 270°, set to 90°
Continuous torque	12 Nm
Peak torque	25 Nm
Operating temperature	–10 to +50°C
Permissible humidity	0–98%, non-condensing
Body material	PP fiberglass reinforced external screws rust-proof
Position indicator	visual, integrated
Testing standards	SEV, VDE

Voltage Setting

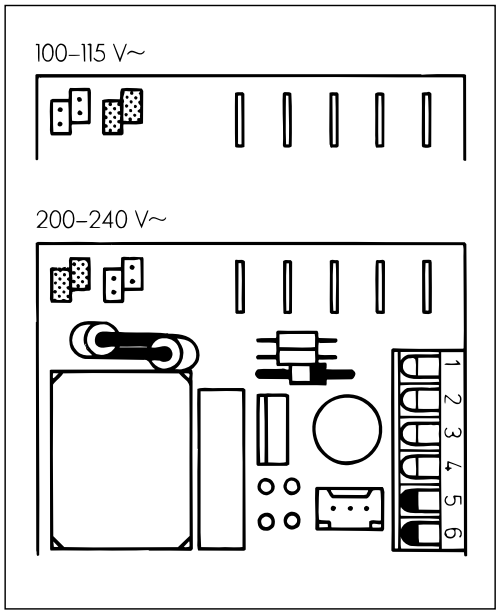

The actuator is adjusted for U_N 200 – 240V AC by the manufacturer. Adjust for U_N 100–115V AC by changing the relevant connections on the electric power supply unit according to the adjoining drawing.

Disconnect power supply before working!

Wiring Diagrams

2 additional limit switches
199.190.138

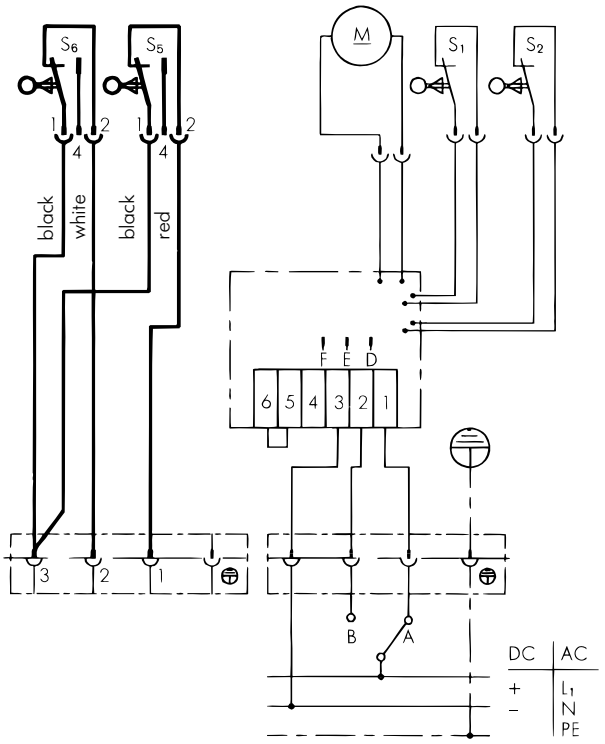

2 additional inductive switches
NPN/PNP 199.190.146
199.190.147

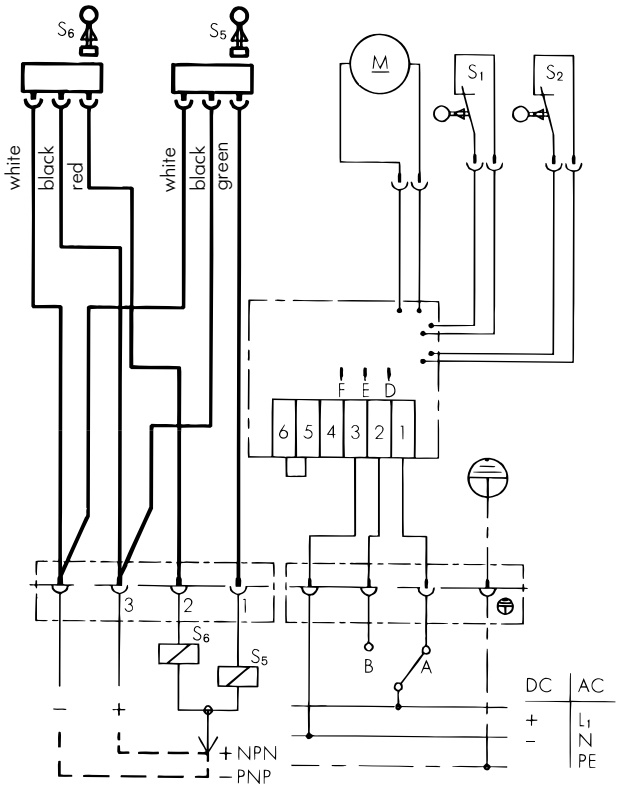

2 additional inductive switches,
Namur 199.190.148

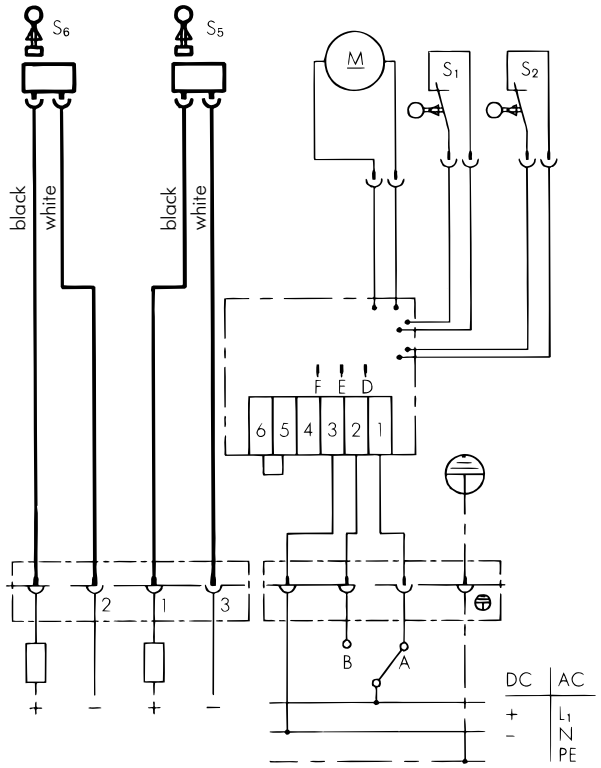

Additional potentiometer
Model: **199.190.140**
≠vertical 2 kΩ
≠horizontal 1 kΩ

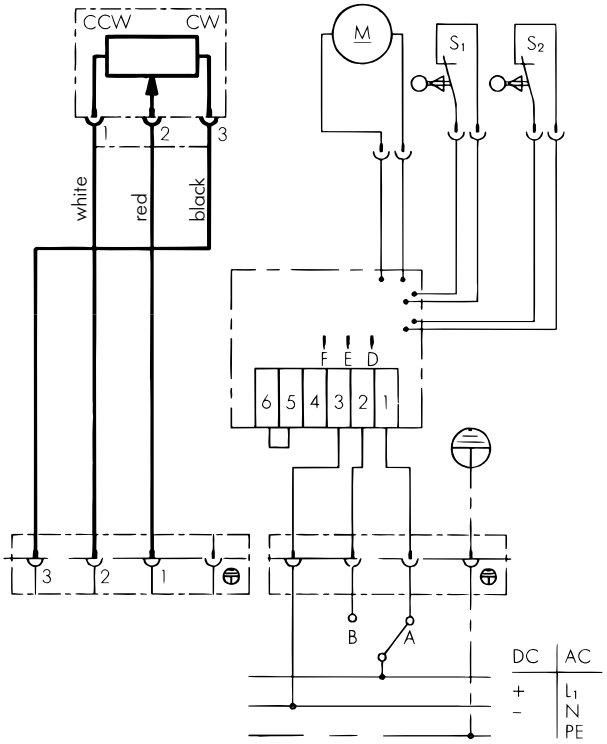

Spare Parts

Description	Code
EA 20 actuator unit complete 115/230V, 50–60 Hz	198 150 431
EA 20 actuator unit complete 24V DC/24V AC, 50–60 Hz	198 150 433
Power supply board 115/230V, 50–60 Hz	198 150 586
Power supply board 24VDC/24V AC, 50–60 Hz	198 150 587
Gear box and motor (irrespective of voltage)	198 800 972
Cable plug 4 P Pin assembly 4P Seal	198 804 621 198 150 444 198 804 781
Cable plug 3P Pin assembly 3P Seal	198 802 060 198 802 058 198 804 781
Cover set consisting of: – 1 cover – 1 showcase inspection glass – 1 O-ring – 1 clamp – 1 seal – 3 PT-screws	198 000 138
Limit switch set consisting of: – 2 limit switches – 4 screws – 4 washers	198 000 140
Position indicator	198 800 899
PVC 3-way ball valve type 343 (manual valve) see Section 1	